Batteries and Chargers - White Paper

Technical Specifications and Characteristics

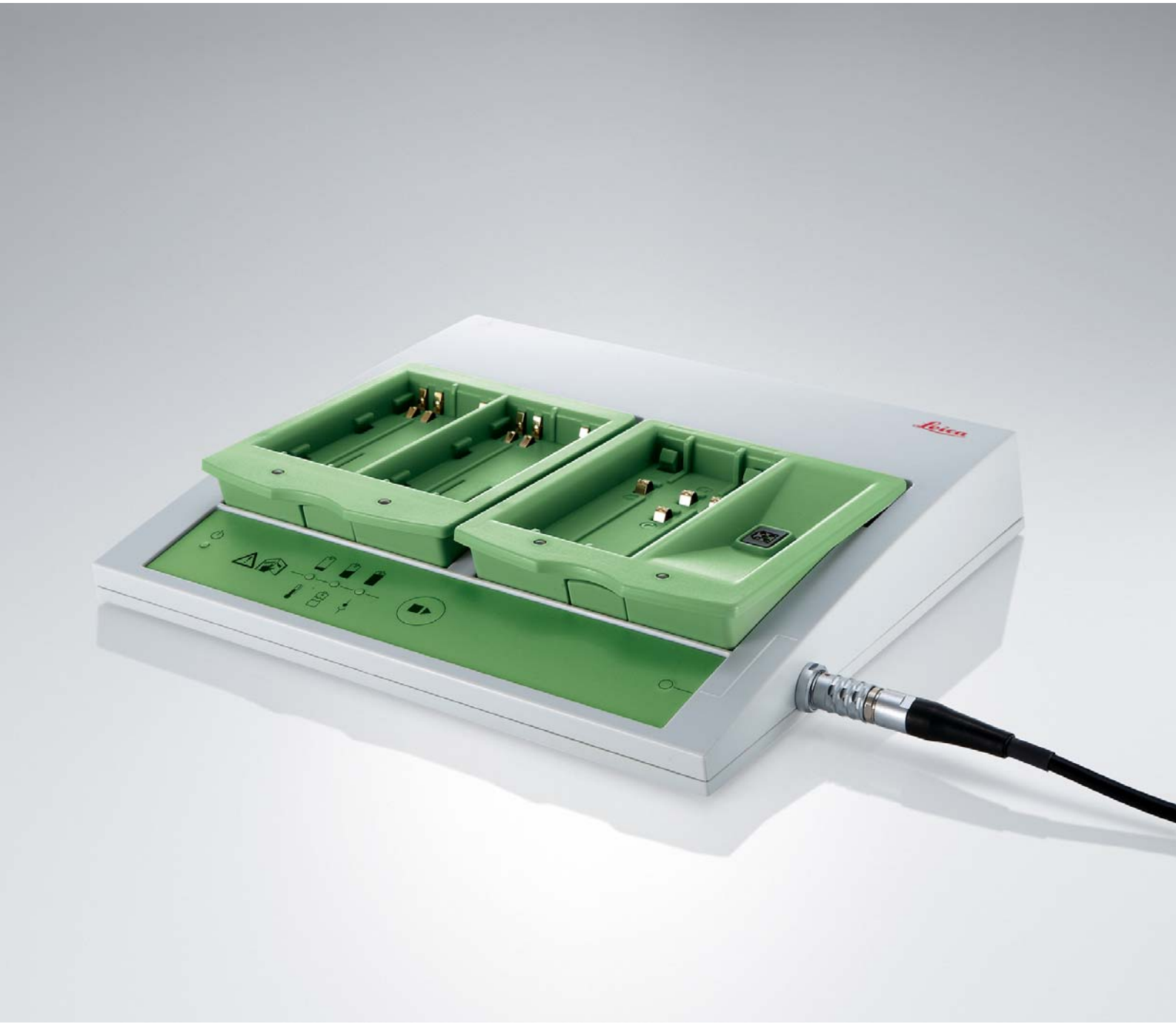

- when it has to be **right**

Leica Geosystems

GEOOPTIC www.geooptic.ru

May 2010

Gerhard Soenser
Leica Geosystems AG
Heerbrugg, Switzerland

GEOOPTIC www.geooptic.ru

Technical Specifications and Characteristics of Leica Geosystems Batteries and Chargers

Gerhard Soenser

Abstract

This paper presents an overview of the different factors regarding batteries and card-readers that should be considered by the surveyor in order to ensure the highest quality and best system performance.

It describes the regulations and guidelines that batteries and chargers must fulfill in order to comply with the requirements for being an approved Leica Geosystems Product.

Introduction

The reliable supply of power to surveying equipment forms one of the most important preconditions for all surveying tasks in the field. It is a basic precondition for the operation of the equipment and an important factor for the equipment to function faultlessly and reliably in all environmental conditions.
For batteries to have a long service life, achieve their optimum performance and function faultlessly, they must be correctly maintained, stored, charged and discharged. Incorrect handling of batteries and chargers may lead to battery malfunction and premature loss of capacity.
This product information summarises the most important and useful information on the chargers and batteries manufactured by Leica Geosystems for surveying instruments and systems.

Charging technology

Leica Geosystems currently provides quick chargers as a matter of preference (accelerated charging).
These charge the batteries in a shorter time. They ensure, thanks to the latest charging technology, appropriate charging and therefore, the long life of the batteries. The chargers are temperature-monitored so that, for example, at low temperatures the batteries are charged more gently.

Leica Geosystems chargers are divided into two product lines: Professional 5000 charging stations for the highest demands and functionality and Professional 3000 chargers as the simple, low-cost alternative.
For batteries with 5-pin charging sockets, a simple, low-cost normal charger with reduced functionality is still available.

Professional 5000 charging station GKL221

The GKL221 is an intelligent charging station with advanced charging technology. It is suitable for charging the Leica Geosystems batteries listed below and ensures the optimal battery operation with your Leica Geosystems device.

Power supply

The GKL221 can be connected to a mains electricity supply with an input voltage range from 100 to 240 V AC by means of the country-specific power cable. With the optional GDC221 car adapter, the charging station can be connected to the battery circuit of a vehicle.

Battery identification

The microprocessor-controlled charging station recognizes the type of battery connected and derives the necessary charging parameters such as time and current. The batteries are optimally and appropriately charged. This ensures the maximum possible service life. The charging station can recognise Li-Ion, NiCd and NiMH cells. Up to five batteries can be connected

GEOOPTIC www.geooptic.ru

to the charger simultaneously. In this situation, two batteries are charged at the same time and the rest are charged in the order that they were connected to the charging station.

The following batteries can be charged with the GKL221 charging station

Version	Name	Cell type	Nominal capacity (mAh)	Typical charging time
Leica Geosystems Li-Ion batteries	GEB90	Li-Ion	2000	2.5 h
	GEB221	Li-Ion	4400	3.0 h
	GEB211	Li-Ion	2200	2.5 h
	GEB212	Li-Ion	2600	2.7 h
	GEB241	Li-Ion	4800	3.5 h
Leica Geosystems camcorder type batteries	GEB121	NiMH	4200	2.5 h
	GEB111	NiMH	2100	2.0 h
Leica Geosystems batteries with 5-pin sockets	GEB70	NiCd	2200	1.5 h
	GEB77	NiCd	600	1.0 h
	GEB79	NiCd	600	1.0 h
	GEB87	NiCd	1100	1.0 h
	GEB187	NiMH	2100	1.5 h
	GEB171	NiMH	8000	5.0 h

Charging times

The charging time depends primarily on the maximum charging current, the battery capacity and the charge state of the batteries when connected. Charging time of discharged batteries at +20 °C (+68 °F):

At ambient temperatures above +20 °C (+68 °F), the battery charging time can increase by up to 1 hour. (For the recommended charging temperature range see the section on "Charging temperature"). As the temperature of the battery increases towards the end of charging, the efficiency of the storage of the charge drops. Taking the GEB121 as an example, in the first 90 minutes the battery is charged to approximately 80% of its full capacity but a further 60 minutes is required for the remaining 20%.

The GKL221 charging station has a temperature-control mode. This temperature-control mode is activated as soon as the battery becomes warm. In temperature-control mode, the charging current is switched off until the temperature of the battery has dropped back to a specific value. Charging is then continued at a reduced charging current. The user does not notice the charging current being switched on and off in temperature-control mode because the indicator remains green (charging). The temperature-control mode is also activated if the ambient temperature is too high.

Trickle charging

If fully charged batteries remain connected to the charging station, trickle charging is performed automatically.
This compensates for the self-discharge of the batteries that occurs for technical reasons. The batteries are always fully charged and ready for use.
The trickle-charging feature only activates for NiCd and NiMH batteries, as Li-Ion batteries undergo a very small self-discharge when not in use.

Refresh function

If the capacity of a NiCd or NiMH battery drops noticeably, it should be "refreshed" 2 to 3 times. When a battery is refreshed, it is completely discharged and then subject to a quick charge. Further information about the refresh function can be found in the GKL221 user manual.

Battery adapter

The GKL221 charger is supplied with two battery adapters. Using the charger in combination with the battery adapters allows the following batteries to be connected to the charger:

Battery adapter	Rechargeable batteries
GKL221 with two GDI221	Up to four Li-Ion batteries and one battery with 5 pole socket.
GKL221 with one GDI221 & one GDI222	Up to two Li-Ion batteries, one camcorder type battery and two batteries with 5 pole sockets.
GKL221 with two GDI222	Up to two camcorder type batteries and three batteries with 5 pole sockets.

Professional 3000 charger GKL211

The GKL211 is a simple, low-cost quick charger (accelerated charging) for charging Li-Ion batteries. Only Leica Geosystems Li-Ion batteries GEB90, GEB211, GEB212 and GEB221 can be charged with this charger.

Power supply

The GKL211 can be connected to the mains electricity supply or to the battery circuit of a vehicle.

GEOOPTIC www.geooptic.ru

A country-specific AC/DC adapter and a car adapter cable are included with the charger.

Battery identification

An identification chip recognises the type of battery connected and derives the necessary charging parameters such as time and current. The batteries are optimally and appropriately charged to ensure the maximum possible service life.

Charging times

The charging times for batteries charged with the GKL211 charger are longer than those experienced with the GKL221 charging station.

Trickle charging and refresh function

This charger has no trickle charge or battery refresh function.

Professional 3000 charger GKL112

The GKL112 is a simple, low-cost quick charger for charging NiCd and NiMH batteries.It is used for charging Leica Geosystems GEB111 and GEB121 batteries.
The specifications are similar to the GKL211 charger.

Trickle charging

The charger has a trickle charge function.
This ensures that the battery is always fully charged and ready for use.

Professional 3000 charger GKL22

The GKL22 is a simple, low-cost standard charger (14-hour charger) for charging NiCd and NiMH batteries. It is available in GKL22 (EU) and GKL22-1 (US) versions for connection to different mains supplies.

Battery identification

The GKL22 has no facility for recognising the battery type and charges all batteries with the same charging current. It can charge all Leica Geosystems batteries with a 5-pin charging socket except the GEB171.

Charging time

The charging time is 14 hours at a current of 200mA.

Trickle charging and refresh function

This charger has no trickle charge or battery refresh function.

Batteries

Cell types

Leica Geosystems currently uses lithium ion (Li-Ion) and nickel-metal hydride (NiMH) cells. The cell type is marked on the battery.

GEOOPTIC www.geooptic.ru

Intelligent batteries

All batteries have an integrated intelligent battery monitoring chip. This chip calculates the charge state of the battery and the most favorable charging cycle from the data it collects, such as temperature and current. This ensures that the battery can achieve its maximum service life and that the customer always knows the actual available remaining capacity of the instrument in use.

Li-Ion

Li-Ion cells have a high energy density. This minimizes battery size and weight.
Li-Ion batteries are low maintenance and exhibit no memory effect. They do not require regular charge/discharge cycles to prolong battery life.
Li-Ion batteries supplied by Leica Geosystems have a protection circuit to maintain safe operation, limit the peak voltage of each cell during charge and prevent the battery voltage from dropping too low on discharge. In addition, the cell temperature is monitored to prevent temperature extremes.

NiMH cells

NiMH cells have a higher internal resistance than NiCd cells and are therefore not suitable for as high charging and discharging currents, or low temperatures as NiCd cells. This higher internal resistance causes the voltage of NiMH batteries to collapse rapidly at minus temperatures and under high current loading. This can result in the activation of the deep discharge protection fitted in all Leica Geosystems batteries. This means that the full capacity of these NiMH batteries cannot be drawn at low temperatures. Leica Geosystems uses only NiMH cells that provide problem-free operation when supplying the current drawn by all Leica equipment, even at –20 °C (–4 °F).

Condition when delivered

Li-Ion

For safety, storage and shipment reasons, when the batteries leave the factory they contain an optimally low quantity of charge.

NiMH

For safety, storage and shipment reasons, when the batteries leave the factory they contain the lowest possible quantity of charge. NiMH batteries must not be stored in a discharged state. The batteries should therefore be fully charged as soon as possible following receipt.

Charging the batteries
New and stored batteries

New NiCd and NiMH batteries reach their maximum capacity only after a number of charging and discharging cycles.
The batteries should be fully discharged and charged three to five times. NiMH batteries that have been stored and not used for an extended period (more than a month) should be refreshed similarly. For Li-Ion batteries that have been stored for longer than one year, a single discharging and charging cycle is sufficient.
The easiest way to perform this cycling is by using the GKL221 charging station, which has a discharge function.

For this conditioning to work reliably, only almost empty batteries should be discharged in the GKL221. Therefore before cycling, the batteries should be

GEOOPTIC www.geooptic.ru

used operate an instrument until it automatically switches off.

Batteries in regular use

After use, a battery in regular use can be placed in the charger until fully charged (the green light flashes). The charging time depends on the battery capacity and temperature. An indication of typical charging times is shown on page 4.

Charging temperature

The charging temperature (ambient temperature) has a significant impact on the life of the batteries. Charging at high temperature can cause loss of capacity. These losses in capacity are irreversible. Even with several charging and discharging cycles, the original capacity can no longer be obtained.
For optimal charging, we recommend that the batteries are charged at ambient temperatures that are as cool as possible (+10 °C to +20 °C / +50 °F to +68 °F). The permitted temperature range in which charging can still be performed is between 0 °C and +35 °C (+32 °F and +95 °F). A temperature-control mode built into the GKL221, GKL211 and GKL112 prevents batteries from being charged at temperatures that may damage them.

Useful capacity

The temperature has a particularly significant effect on the useful capacity of a battery. The batteries can be operated from –20 °C to +55 °C (–4 °F to +131 °F) in accordance with the operating range of the surveying instrument. The useful capacity drops rapidly with reducing temperature. Continuous use in the upper temperature range (> +45 °C / +131 °F) shortens the life of the battery.

Storage

Leica Geosystems batteries can be stored at –40 °C to +55 °C (–40 °F to +131 °F). Do not store batteries inside the surveying instrument. After a long period in storage, batteries should be fully recharged before use.

Li-Ion

Li-Ion batteries start to deteriorate from the date of manufacture. To minimise the aging effect, store the battery in a cool place in a 10%–50% state of charge. Li-Ion batteries do not require regular charging while in storage.

NiMH

NiMH batteries must always be stored fully charged and recharged after 180 days at the latest. High temperatures and high atmospheric humidity accelerate the self-discharging effect. We recommend storage in the range 0 °C to +20 °C (+32 °F to +68 °F) in a dry environment. Irreversible damage can be caused to NiMH batteries if they are stored in the discharged state for an extended period.

Shipment

To prevent hazardous conditions or physical damage (fire, chemical or toxic hazards), batteries must be shipped in the discharged state.
The regulations relating to the shipment of batteries must be observed.

Memory effect

The "memory effect" occurs if the same charging and discharging (partial discharge) conditions are continuously applied to a battery. The battery then no longer provides its full capacity. The operating time per battery charge reduces. If the capacity of the battery drops noticeably, it should be "refreshed" 2 or 3 times (see above).
The memory effect occurs with NiMH and NiCd batteries. Li-Ion batteries are not influenced by the memory effect.

Battery refresh function

If the capacity of a NiCd or NiMH battery drops noticeably, the battery can be refreshed using one to three full charge and discharge cycles. The GKL221 charging station has a discharging and charging function for refreshing batteries.
The GKL112 and GKL211 chargers do not have a discharge function. Therefore the batteries must be discharged in the instrument (i.e. operate until the instrument switches off).

Defective batteries

Even if handled correctly, statistics show that a small number of batteries can still be expected to fail prematurely. Never replace a suspected defective cell in a battery pack.The cells in a battery pack are all from the same manufacturing batch and thus have the same manufacturing tolerances.If new and old cells are mixed, the weaker (old) cells in the battery pack are more heavily loaded and further failures are inevitable. For this reason, the entire battery pack is always replaced in Leica Geosystems service centres. The Li-Ion and camcorder type batteries are in sealed housing and the cells cannot be replaced.

Life

The life of batteries is primarily defined by the following
factors:

- Electrical loading
- Charging method
- Temperatures on charging, discharging and storage
- Quality of the cells

Losses in capacity caused by incorrect charging are practically excluded with the Leica Geosystems chargers that have special switch-off criteria to protect the battery. Reduction in battery capacity is normally due to age. However it can also be the result of storage at excessively low or high temperatures.
The suppliers who provide batteries to Leica Geosystems are among the leading manufacturers of batteries and guarantee good quality.

Protecting the environment / disposal

For reasons of environmental protection and safety, used or defective batteries must not be thrown away. They must be correctly disposed of in a discharged state. Follow the applicable national regulations on disposal.

Supply from other 12 V DC sources
GEV71 cable

For the supply of power to Leica Geosystems equipment from external 12 V DC networks (i.e. vehicle electrical systems) the GEV71 car battery connecting cable must be used. This is connected to the standard battery cable used for Leica Geosystems external batteries.

Protection

The GEV71 cable protects the instrument from damage due to pole reversal, voltage spikes occurring over a limited period and electrostatic discharges. The cable also provides deep discharge protection to the connected battery.

Malfunctions

A "basic suppressor" is integrated into the adapter to prevent malfunctions. Large interference spikes may arise in vehicle electrical systems when the engine is running or when other loads are switched on (e.g. electric windows). These spikes often cannot be sufficiently attenuated by the basic suppressor. If vehicle electrical systems are used to supply power, it is imperative that the engine and other loads are switched off to prevent malfunctions.

Mains supply

If a 12 V DC source supplied from the mains is used, the relevant information and advice from the manufacturer on proper use and safety must be observed.

Customer benefits from the use of Leica Geosystems accessories

The batteries available from Leica Geosystems are of the highest quality in respect of temperature tolerance, recharging capability, operating time and cycle behaviour.
By using Leica Geosystems chargers and observing the recommendations contained in this document, the user can benefit from the following significant advantages:

- Long battery life
- Reliable supply of power in the field
- Batteries and chargers compatibly matched
- Quick charging of batteries
- Prevention of battery memory effect
- Trickle charging after completion of charging
- Microprocessor-controlled and -monitored charging
- Discharging with regeneration charging of the batteries using the GKL221 charging station

GEOOPTIC www.geooptic.ru

Genuine Leica vs. Leica Copies

The sections above described several factors contributing to the high quality of original Leica Geosystems batteries and chargers. Because of their well known quality these Leica Geosystems products are often perceived as quality-defining references on the market.

Hence Leica batteries and reflectors are often used as a model for copying. Subsequently several manufacturers have started to make business by flooding the market with cheap battery copies without having a warranted quality standard ensured. The right column shows the necessary steps to make a genuine Leica Geosystems battery or charger. Most of the steps are invisible to the customer, but in compliance with our strong quality management, we guarantee to supply the best products for our customers.

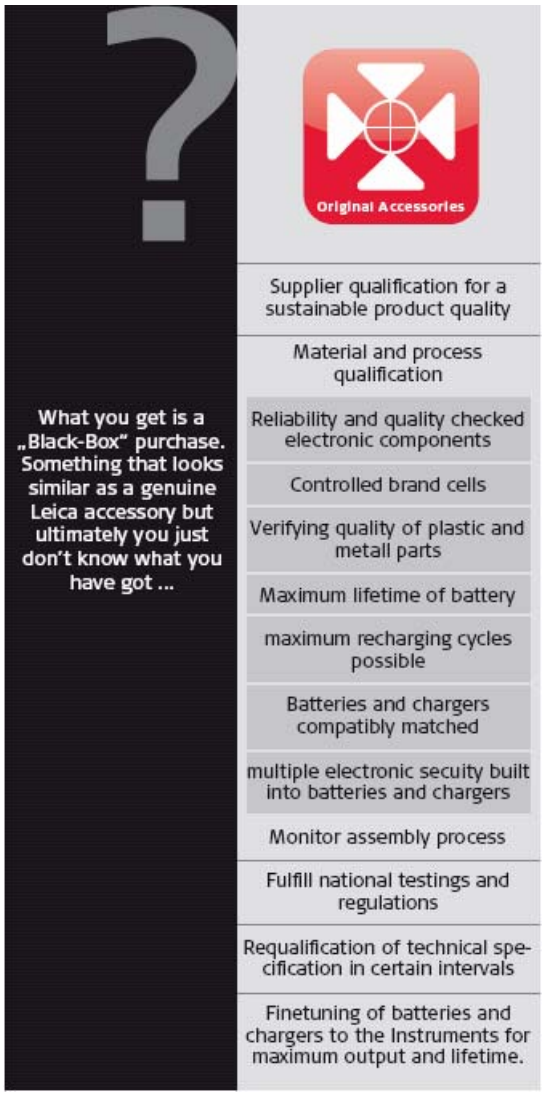

Appendix

System overview

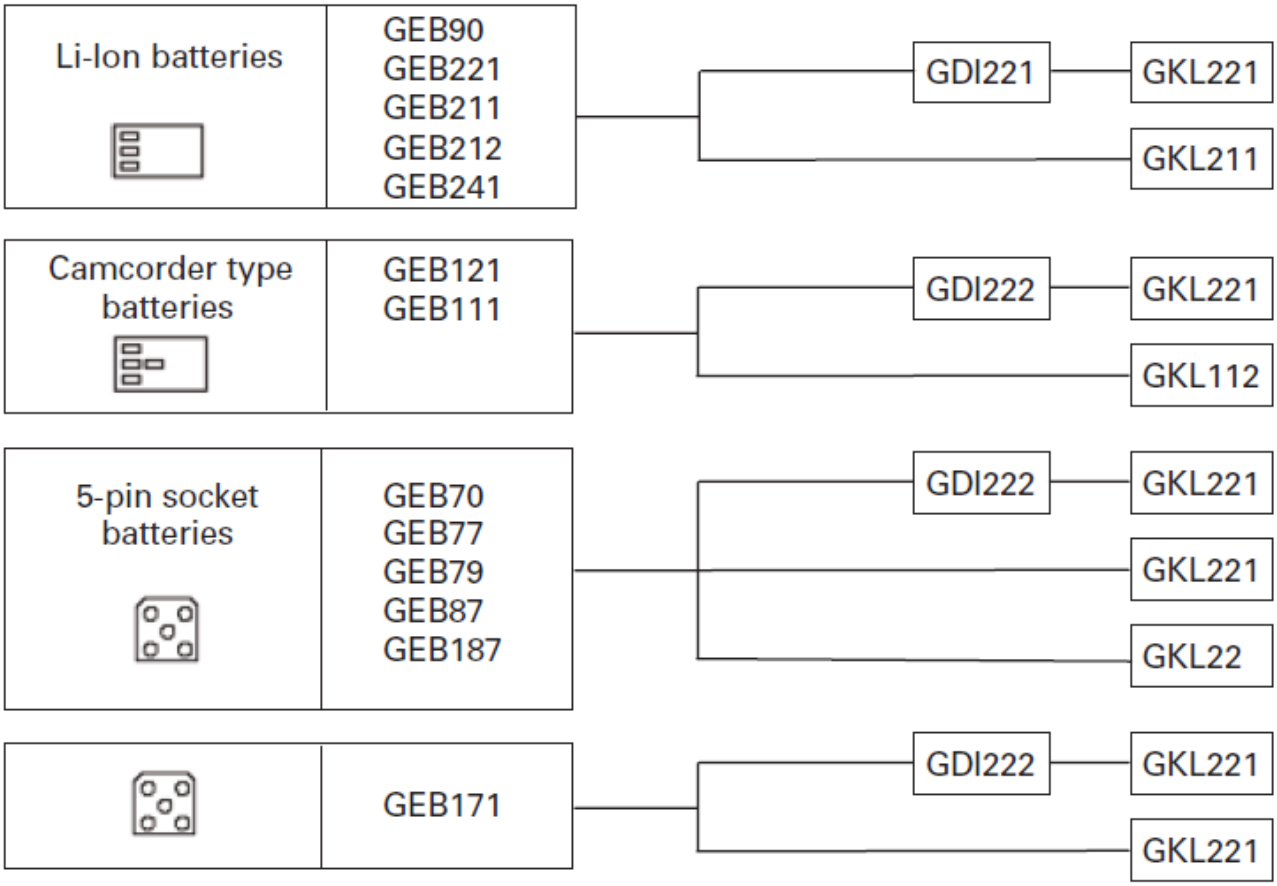

GEOOPTIC www.geooptic.ru

Whether you want to monitor a bridge or a volcano, survey a skyscraper or a tunnel, stake out a construction site or perform control measurements – you need reliable equipment. With Leica Geosystems original accessories, you can tackle demanding tasks. Our accessories ensure that the specifications of the Leica Geosystems instruments are met. Therefore you can rely on their accuracy, quality and long life. They ensure precise and reliable measurements and that you get the most from your Leica Geosystems instrument.

When it has to be right.

Illustrations, descriptions and technical specifications are not binding and may change.
Printed in Switzerland–Copyright Leica Geosystems AG, Heerbrugg, Switzerland, 2010.
VII.10 –INT

Leica Geosystems AG
Heerbrugg, Switzerland

www.leica-geosystems.com

- when it has to be **right**

Leica Geosystems

GEOOPTIC www.geooptic.ru